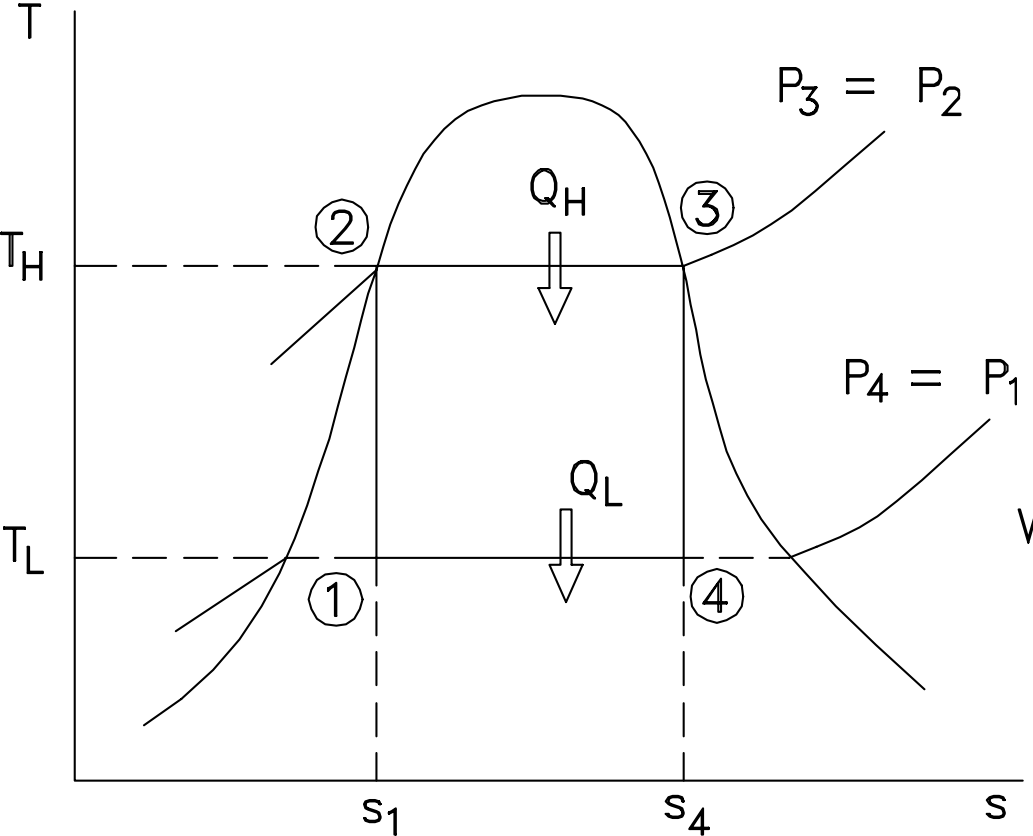
T
$P_3 = P_2$
Q_H
2
3
T_H
$P_4 = P_1$
Q_L
T_L
1
4
s_1
s_4
s

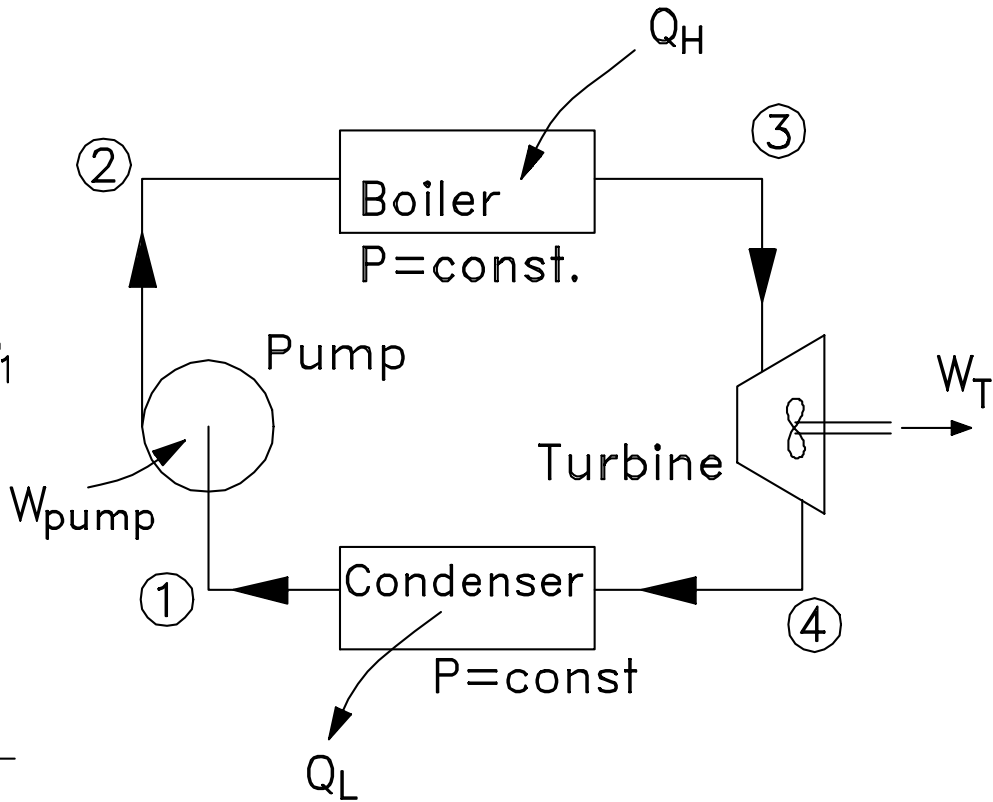
Q_H
2
3
Boiler
P=const.
Pump
W_T
Turbine
W_{pump}
1
Condenser
4
P=const
Q_L