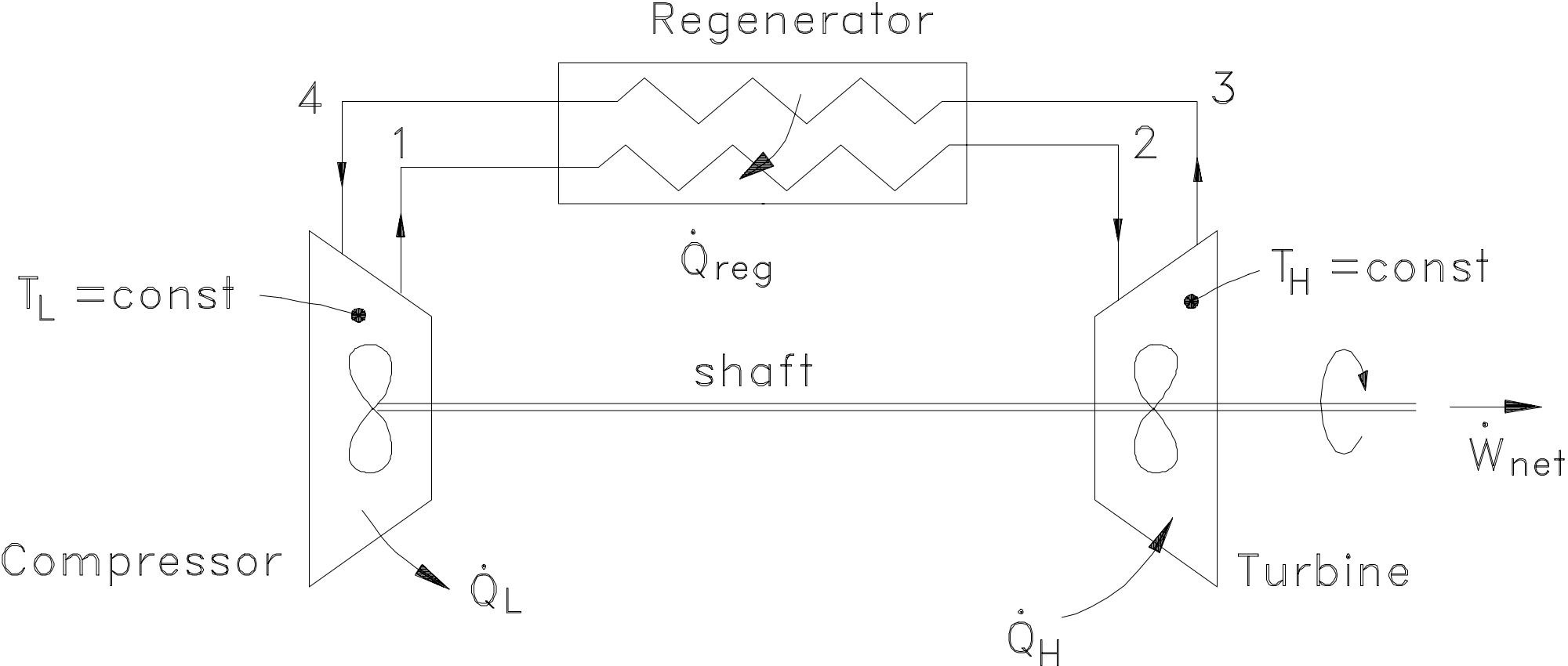
Regenerator
4
3
1
2
$\dot{Q}_{reg}$
T_L =const
T_H =const
shaft
$\dot{W}_{net}$
Compressor
Turbine
$\dot{Q}_L$
$\dot{Q}_H$