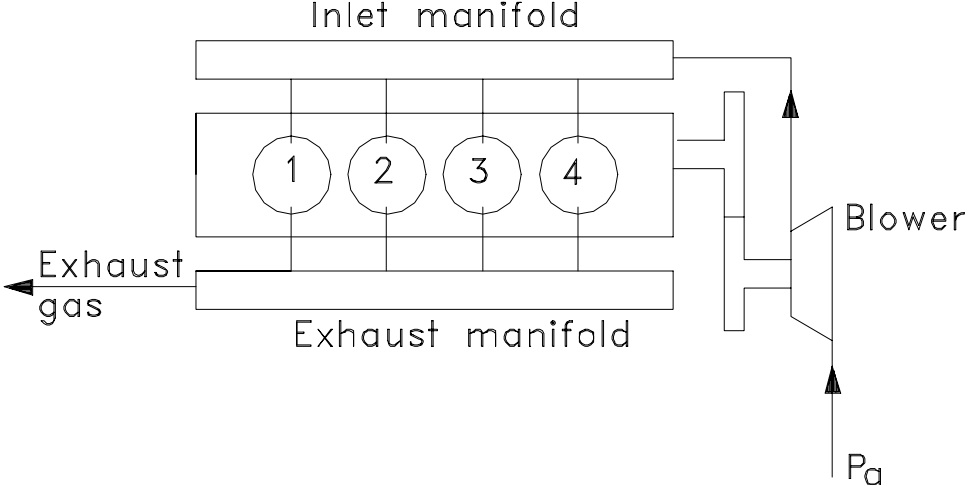

Supercharging

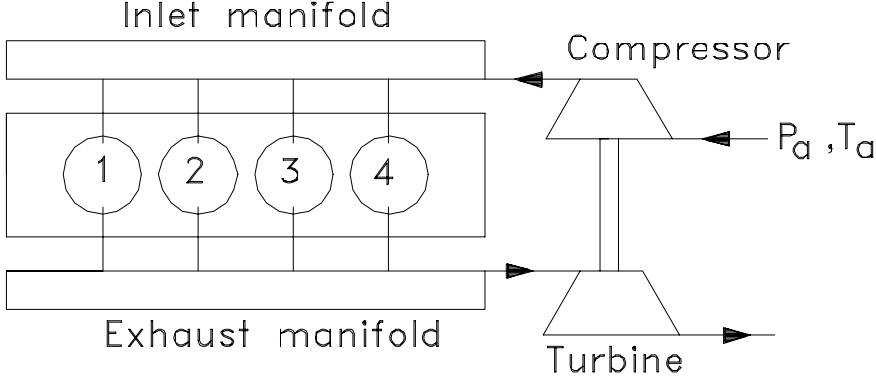

Turbocharging