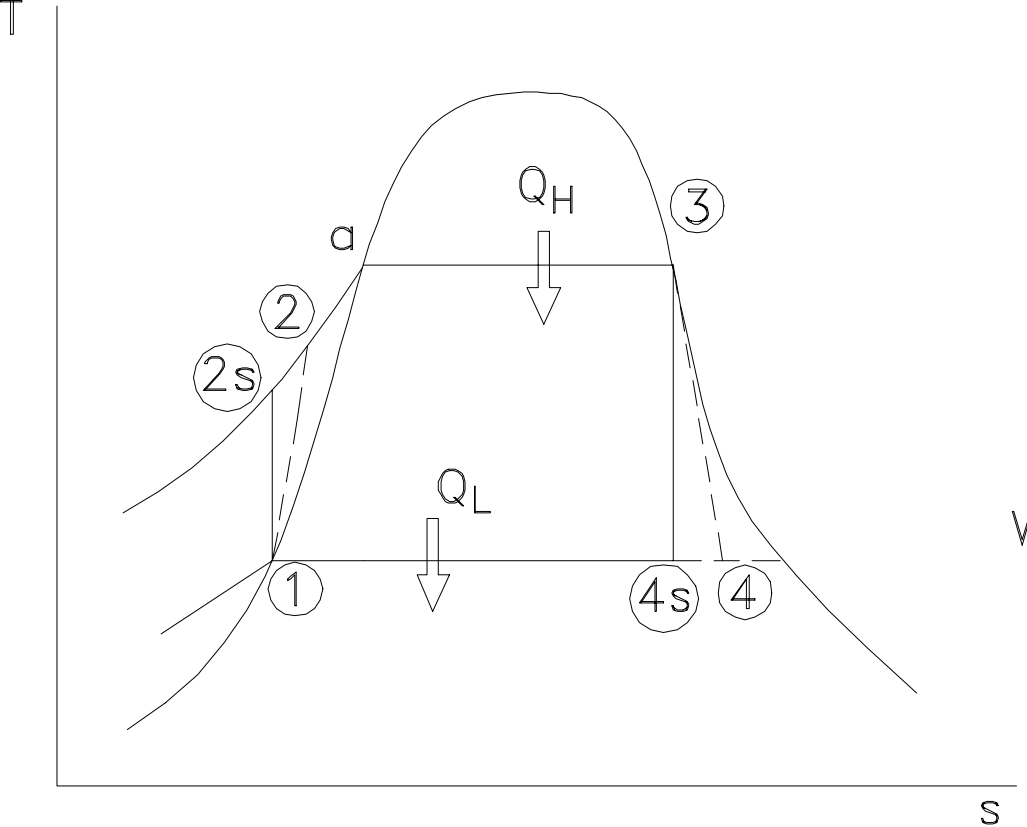
T
s
a
Q_H
Q_L
1
2
2s
3
4
4s

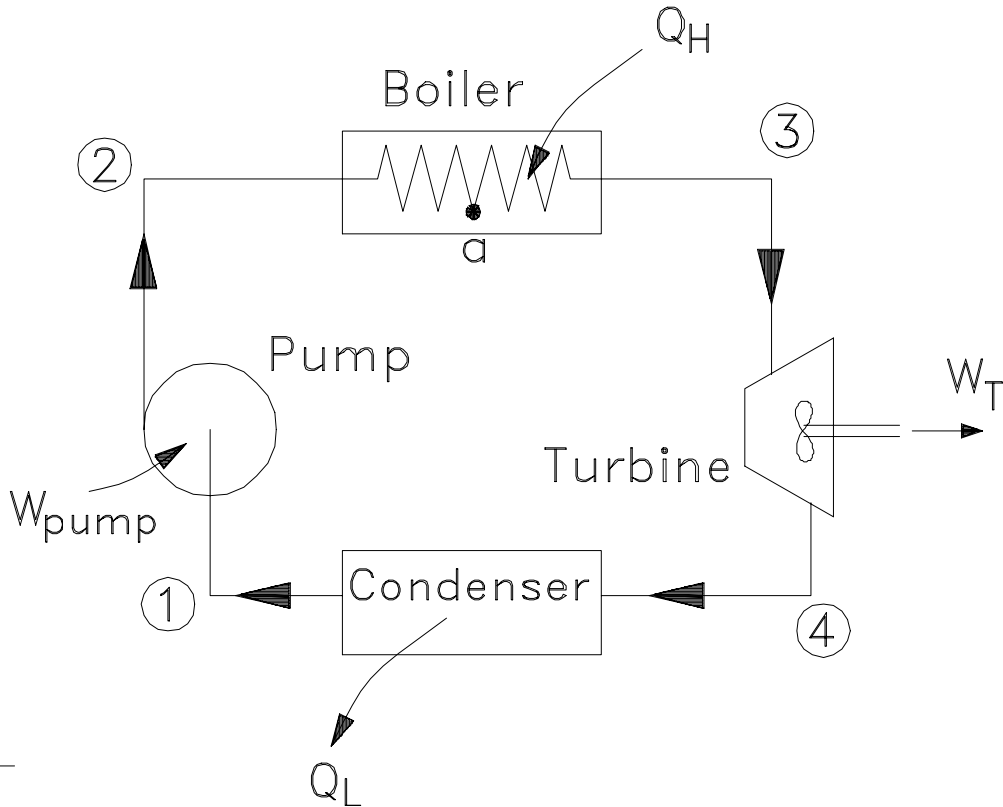
Q_H
Boiler
a
1
2
3
4
Pump
W_{pump}
Turbine
W_T
Condenser
Q_L