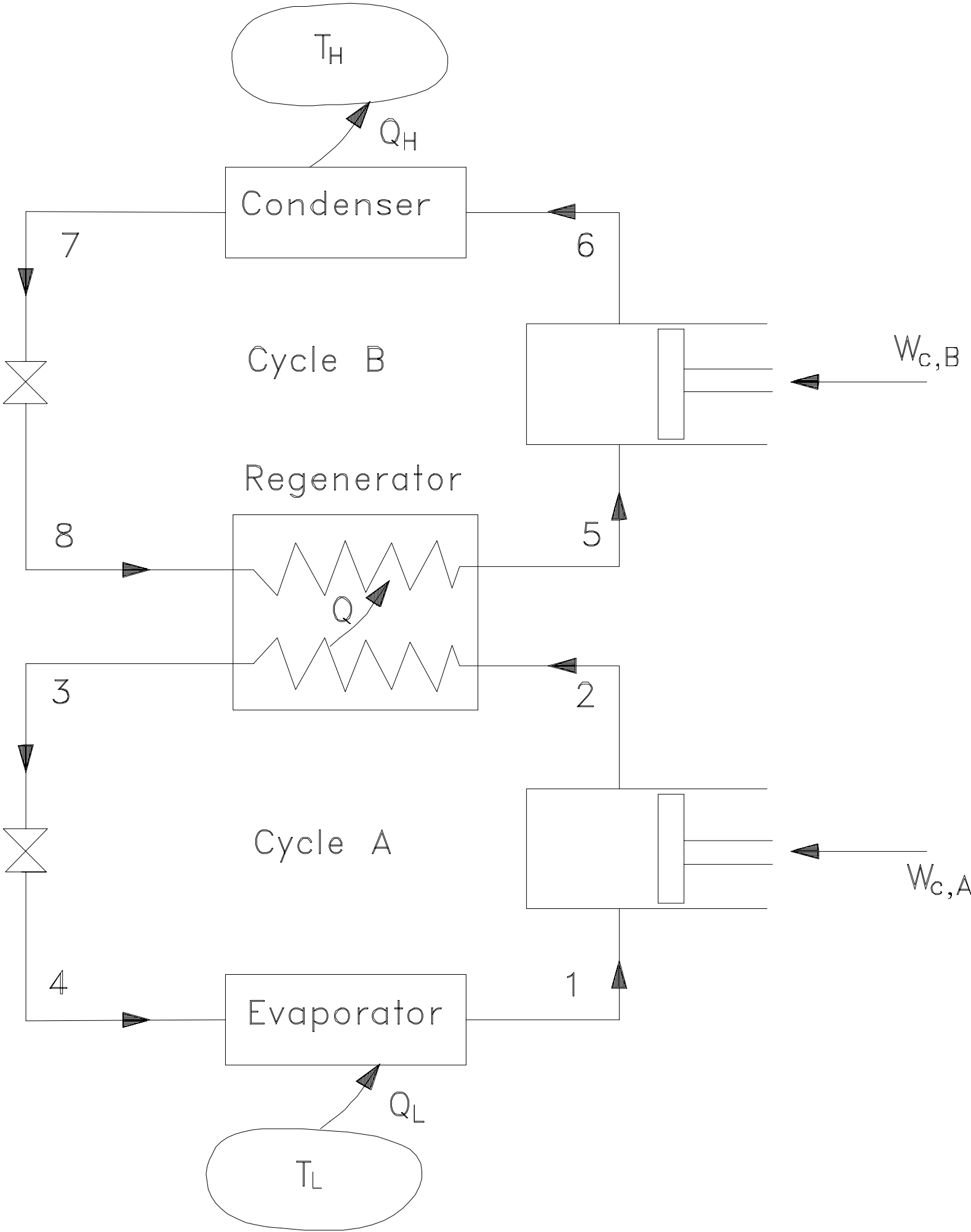
T_H
Q_H
Condenser
7
6
Cycle B
$W_{c,B}$
Regenerator
8
5
Q
3
2
Cycle A
$W_{c,A}$
4
1
Evaporator
Q_L
T_L