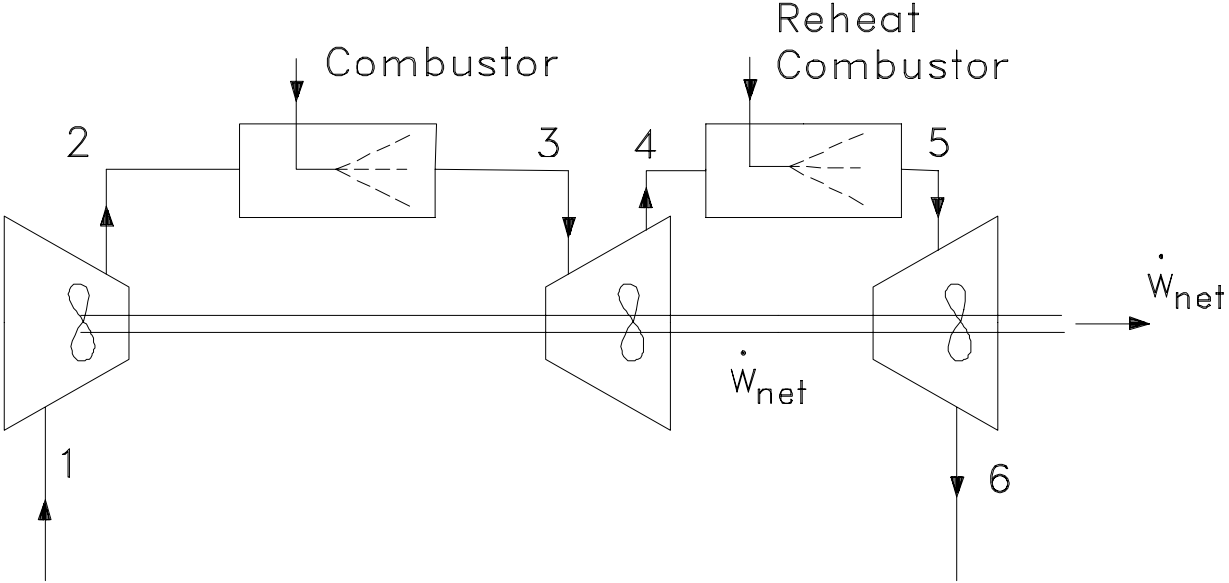
Combustor
Reheat
Combustor
2
3
4
5
1
6
$\dot{W}_{net}$
$\dot{W}_{net}$

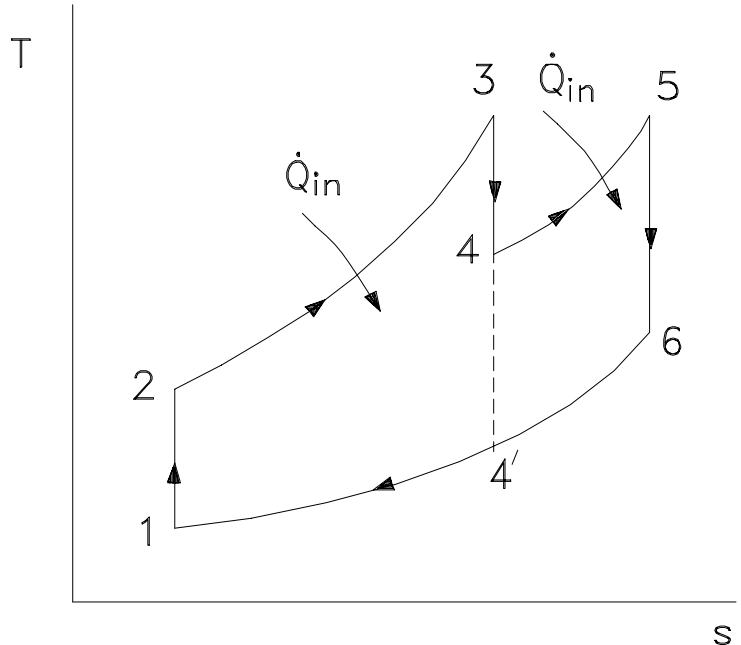
T
s
1
2
3
4
4′
5
6
$\dot{Q}_{in}$
$\dot{Q}_{in}$