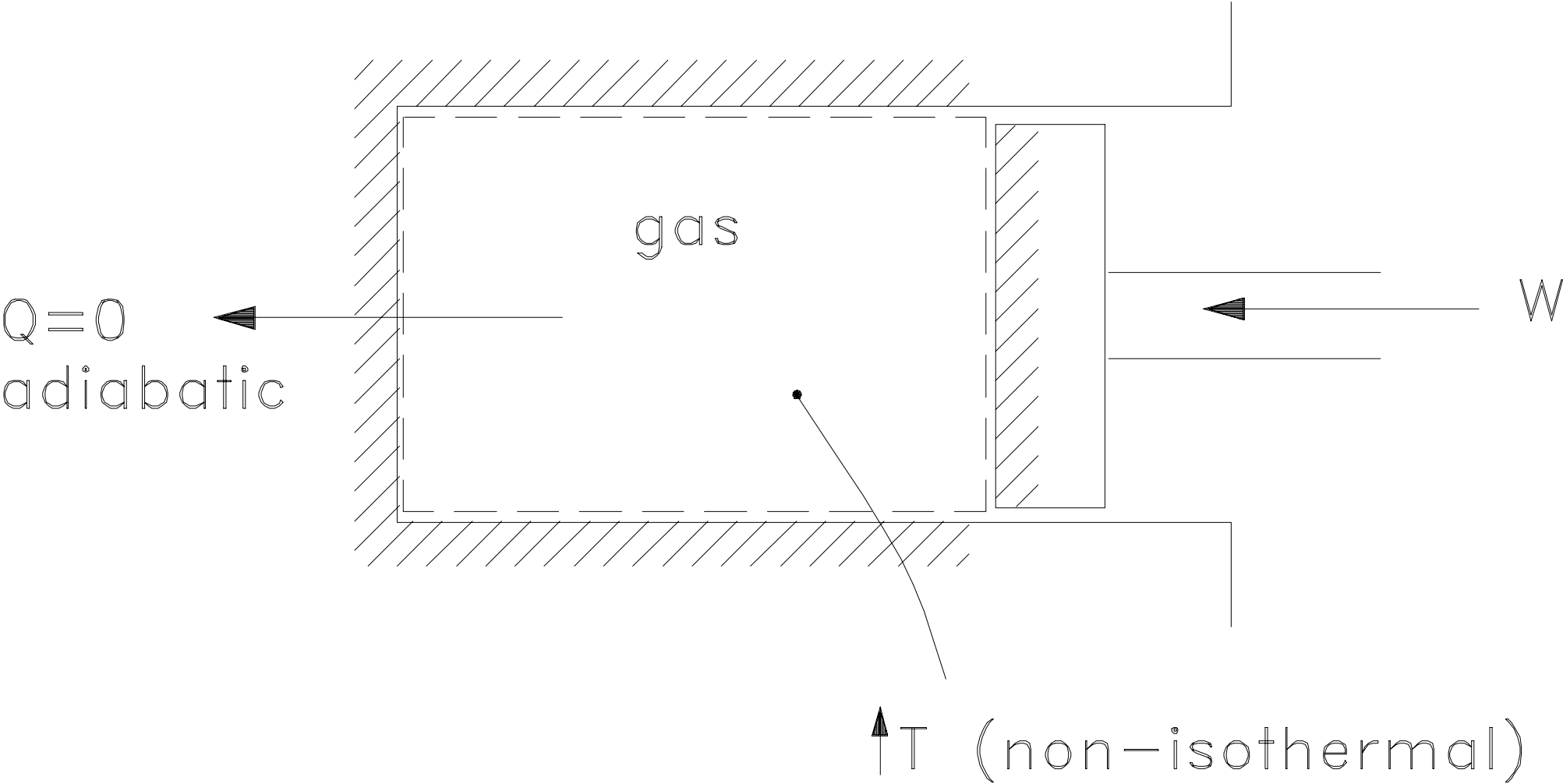
gas
Q=0
adiabatic
W
T (non-isothermal)