Week 3: Lecture 1

Second Law Analysis of Systems

Availability: The theoretical maximum amount of work that can be obtained from a system at a given state P_1 and T_1 when interacting with a reference atmosphere at the constant pressure and temperature P_0 and T_0.

Availability describes the work potential of a given system. It is also refered to as "exergy".

The following observations can be made about availability:

1. Availability is a property - since any quantity that is fixed when the state is fixed is a property. For a system at state 1 and specified values of the atmosphere of T_0 and P_0, the maximum useful work that can be produced is fixed.
2. Availability is an external property - since its value depends upon an external datum - the temperature and pressure of the dead state.
3. Availability is never negative - as long as a system is not at its dead state, it will always be possible to produce some useful work by interacting with the reference atmosphere.
4. Availability of a system is 0 at its dead state when $T = T_0$ and $P = P_0$. It is not possible for the system to interact with the reference atmosphere at the dead state. The system is said to be in thermodynamic equilibrium with its surroundings.
5. Unless otherwise stated, assume the dead state to be:

$$P_0 = 1\ atm$$

$$T_0 = 25°C$$

The maximum work is obtained through a reversible process to the dead state.

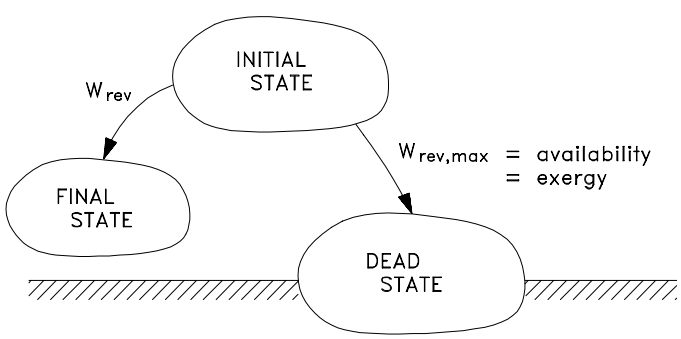

Week 3: Lecture 1

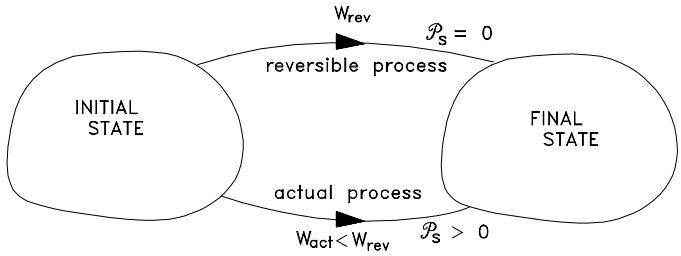

$$\underbrace{IRREVERSIBILITY}_{I} = \underbrace{REVERSIBLE\ WORK}_{W_{rev}} - \underbrace{ACTUAL\ WORK}_{W_{act}}$$

Control Mass Analysis

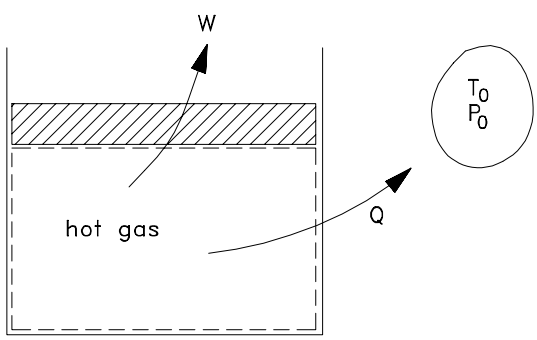

- part of the work done is against the surroundings

$$W_{sur} = P_0(V_2 - V_1)$$

- this is unavoidable → this is not useful work. Nothing is gained by pushing the atmosphere away.
- note the direction of W
-

$$W_{useful} = W_{actual} - W_{sur}$$

To find W_{actual}:

From the 1st law

$$E_1 - Q - W_a = E_2 \quad \rightarrow \quad Q = E_1 - E_2 - W_a$$

From the 2nd law

$$\begin{aligned} \mathcal{P}_s &= \Delta S_{system} + \Delta S_{sur} \geq 0 \\ &= S_2 - S_1 + \frac{Q}{T_0} \end{aligned}$$

Week 3: Lecture 1

Rearranging the above equation gives

$$
\begin{aligned}
W_a &= (E_1 - E_2) - T_0(S_1 - S_2) - T_0\mathcal{P}_s \\
W_u &= (E_1 - E_2) - T_0(S_1 - S_2) + P_0(V_1 - V_2) - T_0\mathcal{P}_s \\
W_{rev} &= (E_1 - E_2) - T_0(S_1 - S_2) + P_0(V_1 - V_2)
\end{aligned}
$$

Define

$$
\begin{aligned}
\Phi &= CONTROL\ MASS\ AVAILABILITY \\
&= W_{rev}\ (in\ going\ to\ the\ dead\ state) \\
&= (E_1 - E_0) - T_0(S_1 - S_0) + P_0(V_1 - V_0)
\end{aligned}
$$

where the specific availability is defined as

$$\phi = \frac{\Phi}{m}$$

In going from one state to another the reversible work is

$$W_{rev} = \Phi_1 - \Phi_2$$

The availability destroyed is

$$I = W_{rev} - W_{useful} = T_0\mathcal{P}_s$$